Classic Car Stacker CLP1

Classic Car Stacker CLP1

The New Classic Car Stacker CLP1.

They are a simple parking lift, suitable for both commercial and residential parking purposes.

The hydraulic cylinder and chains drive system make the operation fast and smooth.

Classic-Park CLP1 can be used for both sedans & SUVs. They are a kind of simple parking lift, suitable for both commercial and residential parking purposes.

They move only vertically, so the users have to clear the ground level to get a higher level car down.

The hydraulic cylinder and chains drive system make the operation fast and smooth. the Classic CLP1can be used for both sedan & SUV a Features

– Galvanized and corrugated platforms guarantee safety and a long lifetime

– Anti-slip corrugated deck protect both vehicle and driver from possible slip and damage but is still high-heel shoe friendly

– The pole with piston is chroming to anti-corrode to ensure its long using life

– Individual hydraulic power pack and control panel

– Self-standing and self-support structure

– Symmetrically designed column and middle post sharing feature save cost and space

– Synchronisation chain assuring the lifting platform balance

– Electric key switch for security and safety

– Automatic shut-off if an operator releases the key switch

– Dynamic mechanical locks as an anti-falling device hold the platform in place

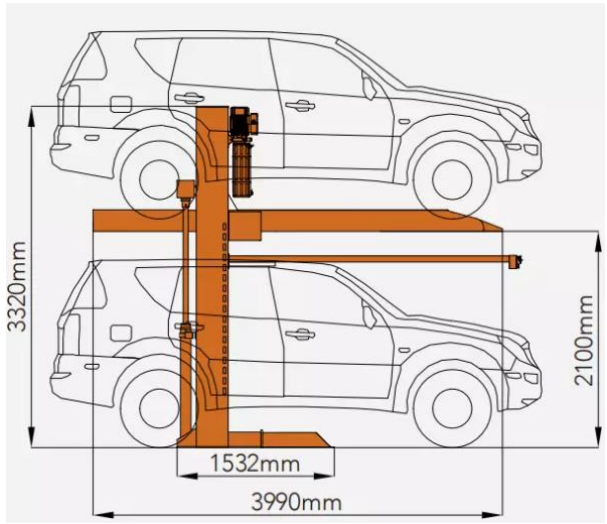

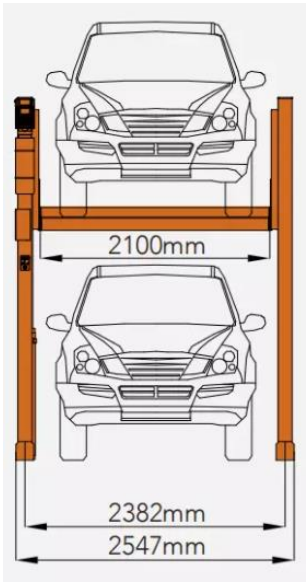

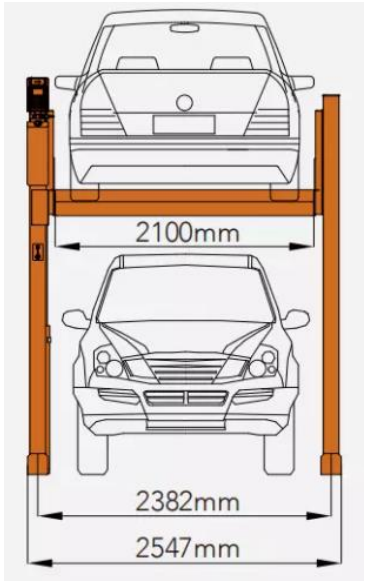

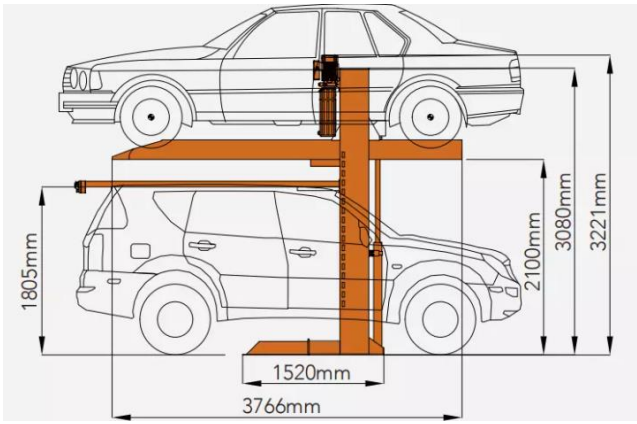

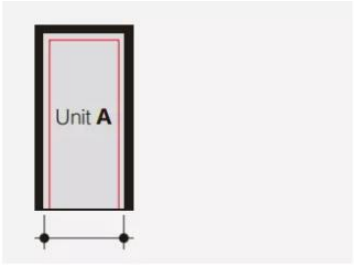

Total width required	Clear platform width
2547	2100
2647	2200
2747	2300
2847	2400
2947	2500

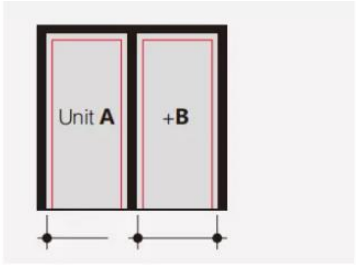

Total width required	Clear platform width
4929	2100
5129	2200
5329	2300
5529	2400
5729	2500

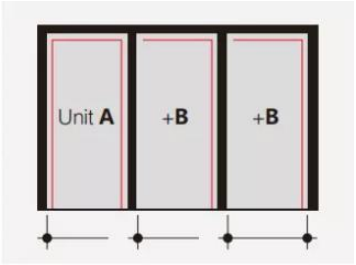

Total width required	Clear platform width
7311	2100
7611	2200
7911	2300
8211	2400
8511	2500

Classic Car Stacker CLP1